FOLDABLE ENGINE CRANE
INSTRUCTION & USER MANUAL

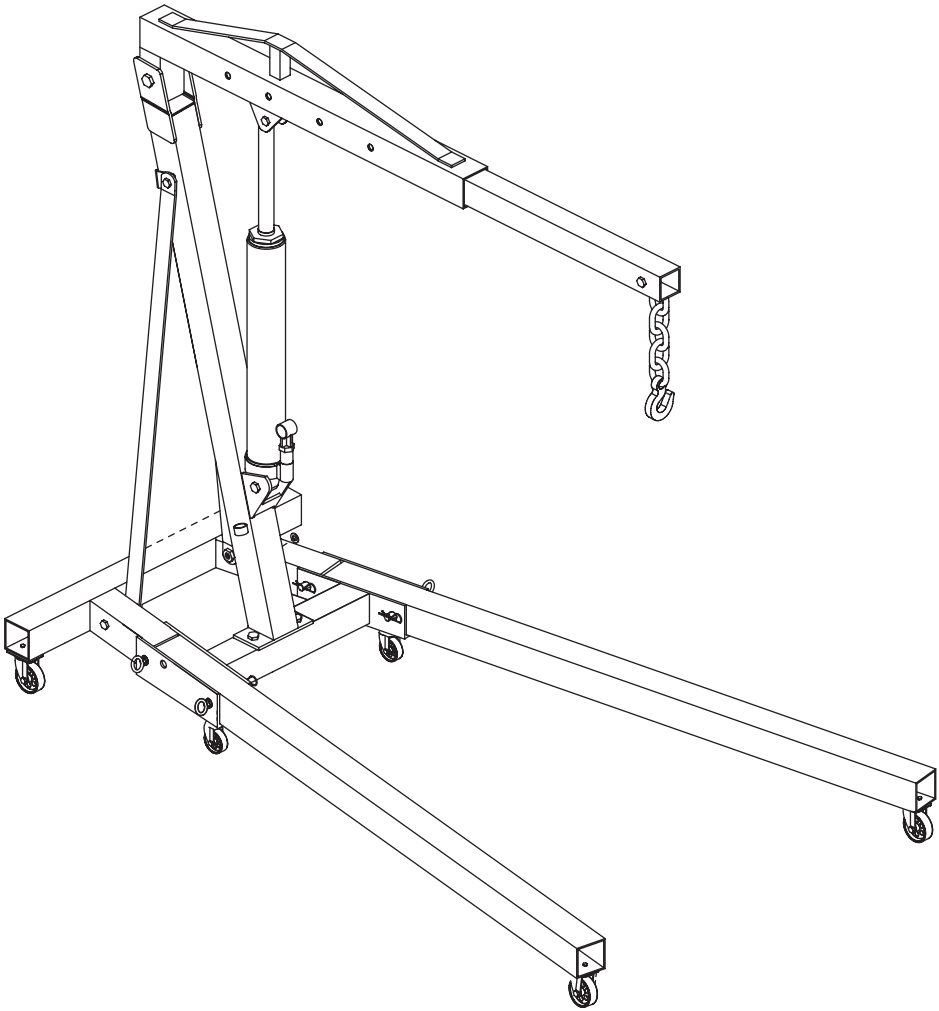

TH72004

Original Instructions

IM-TH72004-EN
Iss: 05/2023

EN

GENERAL WARNINGS & DISPOSAL

To reduce the risk of injury, the user must read the instruction manual.

This symbol is used throughout this manual to warn the user about potential risks. Please read & understand these sections before using the device.

Caution! Wear ear-muffs. The impact of noise can cause damage to hearing.

Caution! Wear protective safety gloves.

Caution! Wear safety goggles. Sparks generated during working or splinters, chips and dust emitted by the device can cause loss of sight. wood and other materials. Never use the device to work on any materials containing asbestos!

Caution! Wear a breathing mask. Dust which is injurious to health can be generated when working on wood and other materials. Never use the device to work on any materials containing asbestos!

The month and year of manufacture can be found within the product serial number e.g. MMYYPPPAXXXXX. Where production month (MM) and production year (YY) are included.

Contents

GENERAL SAFETY WARNINGS	4
PRODUCT DESCRIPTION	5
SPECIFICATIONS	5
ASSEMBLY	5
BEFORE USE	7
OPERATION	8
Lifting and Lowering	8
Folding the Frame	8
Bleeding Instructions	9
MAINTENANCE	9
Cleaning, Maintenance, and Lubrication	9
WARRANTY STATEMENT	10-11
DECLARATION OF CONFORMITY	12

GENERAL SAFETY WARNINGS

⚠ WARNING!

Read all safety warnings and instructions.

Failure to follow the warnings and instructions may result in serious injury.

Save all warnings and instructions for future reference.

1. Study, understand, and follow all instructions before operating this device.
2. Do not exceed 2 ton rated capacity for the Engine Crane.
3. Use only on hard, level surfaces.
4. Before moving, lower the load to the lowest possible point.
5. Use only sling or chains with a rated capacity greater than the weight of the load being lifted.
6. Do not allow load to swing or drop violently while lowering or moving.
7. Do not make any alterations or modifications to Engine Crane. Do not adjust safety valve.
8. Properly extend leg extensions and secure boom in proper setting before use.
9. Follow capacities marked on boom; capacity decreases as boom lengthens.
10. Wear ANSI-approved safety goggles and heavy-duty work gloves during use.
11. Verify replacement jack has same rating, mounting points and maximum length.
12. Do not use for aircraft purposes.
13. Inspect before every use; do not use if parts loose or damaged.
14. Keep your work area clean and well lit. Cluttered work areas invite accidents.
15. Keep bystanders, children, and visitors away while operating Engine Crane. Distractions can cause you to lose control.
16. Stay alert. Watch what you are doing, and use common sense when operating a jack. Do not use a jack while tired or under the influence of drugs, alcohol, or medication. A moment of inattention while operating jacks may result in serious personal injury.
17. Follow instructions in the “Inspection, Maintenance, And Cleaning” section of this manual. Use of unauthorized parts or failure to follow maintenance instructions may create a risk of injury and may void any applicable warranty.
18. Maintain labels and nameplates on the Engine Crane. These carry important information.
19. Before use, read manufacturer’s instruction manual for the object you will lift.
20. The warnings, precautions, and instructions discussed in this manual cannot cover all possible conditions and situations that may occur. The operator must understand that common sense and caution are factors, which cannot be built into this product, but must be supplied by the operator.

⚠ WARNING!

For safety and ease of assembly, use two people to assemble the Shop Crane.

DO NOT TIGHTEN ANY BOLTS UNTIL YOU ARE FULLY FINISHED WITH ASSEMBLY. OTHERWISE PARTS WILL NOT LINE UP PROPERLY.

PRODUCT DESCRIPTION

Engine Crane is designed to safely lift and lower rated capacity engines. Welded steel tube construction, heavy duty chain and safety hook, steel casters and wheels ensure safety, strength and stability.

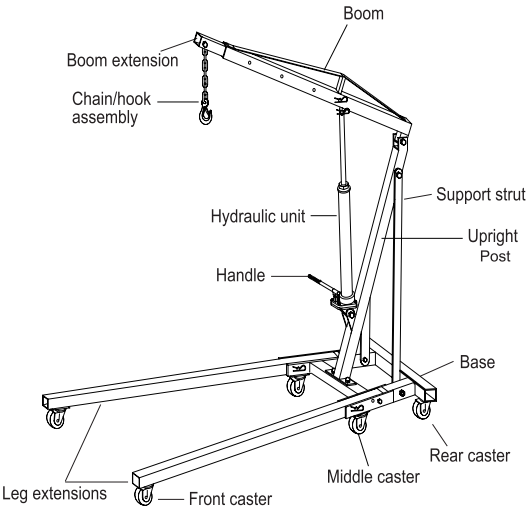

SPECIFICATIONS

	Boom Position	Capacity (Ton)	Min. Hook Height (cm)	Max. Hook Height (cm)	N/G Weight (kg)
TH72004	1	2.0	23.75	184	86 / 92
	2	1,5	8.70	196	
	3	1,0	-	208	
	4	0,5	-	220	

Crane Dimensions: 1745x50x1460 mm

ASSEMBLY

1. Slide the Legs into the front of the Base and Lock Legs in place using the Lock Pins. To insert the Lock Pins, lift up on front of Base until holes line up. After all four Lock Pins are inserted, insert one R-Pin through small hole at end of Each Lock Pin until it snaps into place.

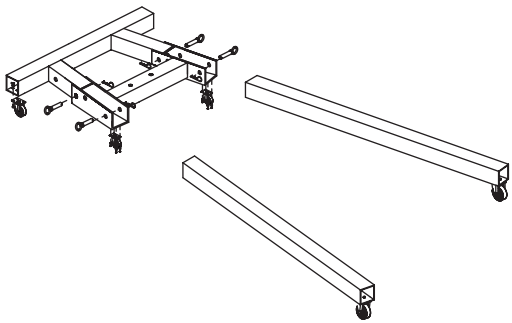

2. Use the Bolts, Washers, and Nuts to secure the bottom of the Post to the Base

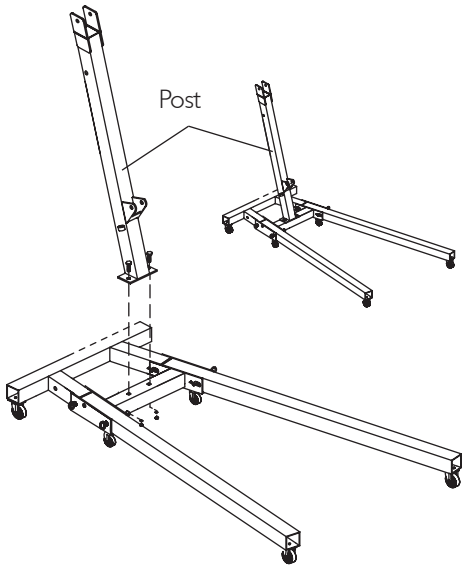

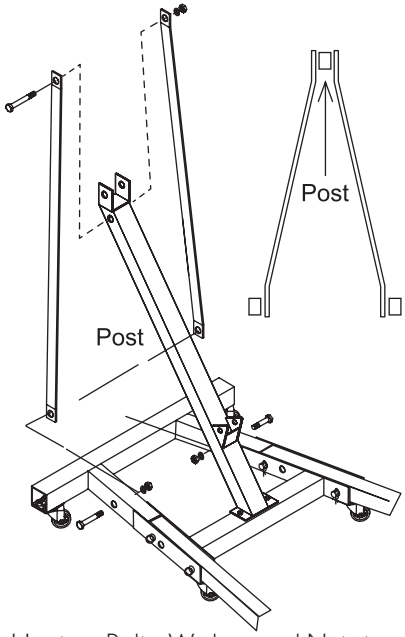

3. Use two Bolts, Washers and Nuts to fasten the lower ends of the Supports to the inside of the Frame then use one Bolt, Washer and Nut to fasten the top ends of the Supports and the handle to the Post.

4. Use the Bolt, Washer and Nut to attach the Boom to the top of the Post.

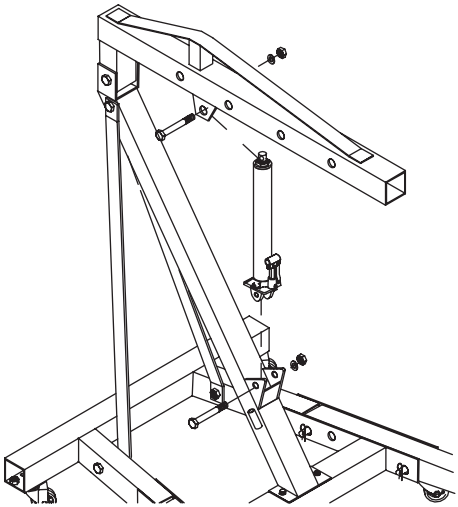

5. Use a Bolt, Washer and Nut to attach lower end of the Jack to the Post and another Bolt, Washer and Nut to attach the top of the Jack to the Boom

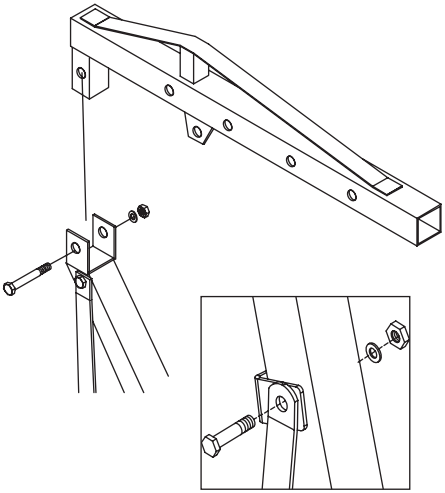

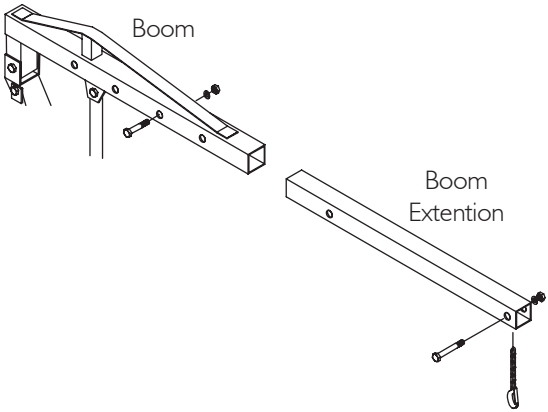

6. Slide the Boom Extension into the Boom and use the Bolt, Washer and Nut to secure at the desired load rating. Use

the Bolt, Washer and Nut to attach the Hook and Chain to the end of the Boom Extension.

7. After assembly, tighten all Nuts and Bolts securely using a Wrench or Socket (sold separately).

BEFORE USE

1. Verify that the product and the application are compatible.
2. Before using this product, read the owner's manual completely and familiarize yourself thoroughly with the product, its components and recognize the hazards associated with its use.
3. Inspect crane before each use. Do not use if bent, broken or cracked components are noted. Ensure that casters/ wheels and boom move freely. Check for and tighten any loose assemblies.

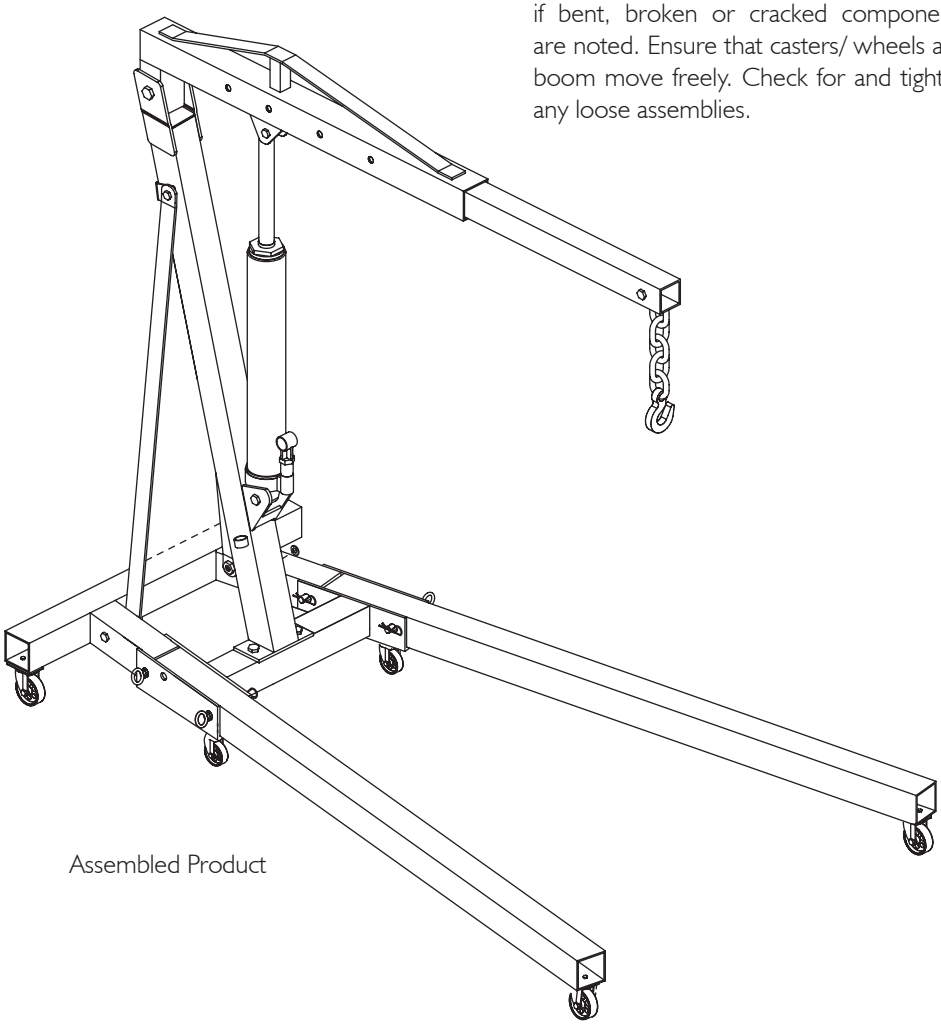

Assembled Product

OPERATION

Lifting and Lowering

1. Locate the hole on the Boom with a weight limit higher than the weight you will be lifting. **For example: Locate the 1 TON hole on the Boom for a load that is under one Ton.**
2. Adjust the Boom Extension so the hole furthest from the hook-end aligns with the chosen hole on the Boom. Secure into place by inserting the Bolt through all aligned holes and tightening in place with the Washer and Nut.

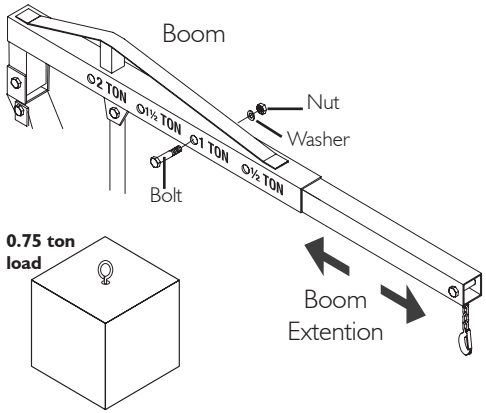

⚠ WARNING!

Do not stand under an object that is being lifted by the Engine Crane.

⚠ WARNING!

Fully tighten the release valve or else the Jack may lower or may not be able to reach the full height.

3. Move the Crane so that the Hook and Chain is directly above the item to be lifted.
4. Securely attach the Hook and Chain to the item.
5. To raise the Boom, turn the Jack's release valve fully clockwise (right). Insert the Handle into the Jack and pump (up and down) repeatedly until the item has been lifted to the desired height.

⚠ WARNING!

Do not move the crane when under load. The Casters are not designed to be rolled when the Crane is lifting heavy objects.

6. To lower the Crane, SLOWLY turn the Jack's release valve counterclockwise (left).

⚠ WARNING!

Lift only on areas of the engine as specified bythe vehicle manufacturer. Be sure all tools and personnalare clear before lowering load.

Folding the Frame

1. Lower Crane all the way.
2. Remove R-Pins from the front Lock Pins. Remove the front Lock Pins. Leave rear Lock Pins in.
3. Raise Leg until it rests against handle.
4. Insert a front Lock Pin into the middle hole of the Base, for each Leg, and reinsert R-Pins.

⚠ WARNING!

Do not fold crane while loaded.

Bleeding Instructions

IMPORTANT! Before first use, check for proper hydraulic oil level and thoroughly test the equipment. If it does not work properly, bleed excess air from its hydraulic system as follows:

1. Open Release Valve and lower Jack completely.
2. Remove Oil Plug and fill with hydraulic oil (sold separately) to full level.
3. Apply downward pressure to the Boom and Pump the Jack Handle quickly several times.
4. Check the Oil Fill Hole and, if necessary, top off the Oil Fill Hole with hydraulic oil.
5. Replace the Oil Plug and close the Release Valve.
6. Test the equipment several times for proper operation before attempting to lift a load. If, after bleeding, the equipment still does not appear to be working properly, do not use the equipment until it has been repaired by a qualified service technician.

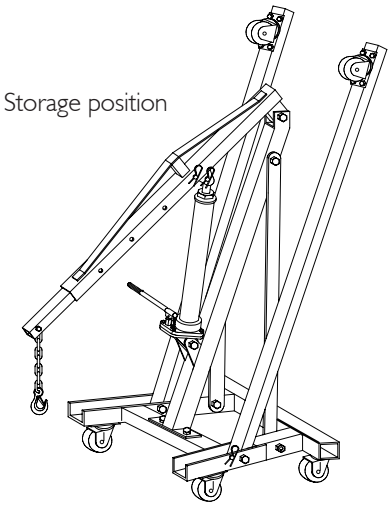

MAINTENANCE

Cleaning, Maintenance, and Lubrication

1. Before each use, inspect the general condition of the Jack. Check for broken, cracked, or bent parts, loose or missing parts, and any condition that may affect the proper operation of the product.

⚠ WARNING!

Do not use damaged equipment.

If a problem occurs, have the problem corrected before further use.

2. Before each use, thoroughly test the Jack for proper operation prior to its actual use. If the Jack appears not to be working properly, follow Bleeding instructions
3. Change the hydraulic oil at least once every three years:
   - With the Jack fully lowered, remove the Oil Filler Plug on the side of the Housing.
   - Tip the Jack to allow the old hydraulic oil to drain out of the Housing completely, and dispose of the old hydraulic oil in accordance with local regulations.
   - With the Jack upright, completely fill the Housing with a high quality hydraulic oil (not included) until the oil just begins to run out of the Oil Fill Hole.
   - Open the valve Release Screw and pump the Handle to bleed air from the system.
   - Reinstall the Oil Filler Plug.
4. Wipe dry with a clean cloth. Then, store the Jack in a safe, dry location out of reach of children and other non-authorized people.

WARRANTY STATEMENT

JCB Power Tools are guaranteed against manufacturing defects for up to 3 years from date of purchase

Warranty cover commences from the date of purchase on the retail sales receipt and is valid only for JCB Tools products bearing the CE and UKCA mark and a visible serial number.

In the unlikely event your JCB Tool is subject to a manufacturing fault within the warranty period, JCB Tools may repair the product by replacing defective parts free of charge at our discretion. In the event parts are irreplaceable JCB Tools may replace your product free of charge. The original product will remain the property of JCB Tools in this situation.

The above repair or replacement of products will be undertaken providing that:

- The product has been subject to fair wear and tear only.
- The product has not been subject to accidental or cosmetic damage.
- The product has not been misused and has been used only in accordance with the instruction manual provided.
- The product has not been subject to overload or insufficient servicing and maintenance.
- The product has not been subject to any abnormal environmental conditions or inappropriate operating conditions.
- Repairs have not been attempted by an unauthorised person and no modifications have been made to the product.
- Repairs have not been undertaken using non-genuine spare parts.

JCB Tools used for Hire Fleets or as part of B2B and Service Contracts are not covered by these terms and conditions.

JCB Tools 3 Year Warranty excludes the following (where applicable):

- Components normally subject to wear such as carbon brushes.
- Batteries, Chucks and Chargers.
- Accessories and consumable items.
- Cases and tool storage products.

If your product develops a fault within 30 days of purchase, return it to the retailer where it was purchased together with your sales receipt. If a product develops a fault after 30 days a warranty claim must be submitted.

JCB TOOLS WILL NOT BE LIABLE FOR ANY INJURIES OR CONSEQUENTIAL DAMAGES RESULTING FROM USE OF THIS PRODUCT.

EU DECLARATION OF CONFORMITY				UK DECLARATION OF CONFORMITY
1.	PRODUCT(S) COVERED BY THIS DECLARATION:	Product: UK Product Code No. EU Product Code No. Factory Reference No.	Hydraulic Crane TH72004 TH72004	Batch/PO No. 20221207JCB
2.	IDENTIFICATION DETAILS OF MANUFACTURER:	Name: Address: Country:	Yellow and Black Tools Ltd. (T/A: JCB Tools) Unit 55 Romsey Industrial Estate, Greatbridge Road Romsey, Hampshire SO51 0HR UK	
	AUTHORISED REPRESENTATIVE:	Name: Address: Country:	Trade House Forsage Instrument Pol. Sp. z o. o. 15-561, Grodecka IA, Biakystok, Polska. Poland	
3.	THIS DECLARATION OF CONFORMITY IS ISSUED UNDER THE SOLE RESPONSIBILITY OF THE MANUFACTURER			
4.	OBJECT OF THE DECLARATION:	Product: Function:	Hydraulic Crane Lifting vehicle engine	
5i.	THE OBJECT OF THE DECLARATION DESCRIBED IN POINT 4 IS IN CONFORMITY WITH THE RELEVANT UNION HARMONISATION LEGISLATION:	2006/42/EC	The Machinery Directive	
5ii.	THE OBJECT OF THE DECLARATION DESCRIBED IN POINT 4 IS IN CONFORMITY WITH THE RELEVANT UK STATUTORY INSTRUMENTS:	2008 No. 1597	The Supply of Machinery (Safety) Regulations 2008	
6.	REFERENCES TO THE RELEVANT HARMONISED SAFETY STANDARDS USED OR REFERENCES TO THE OTHER TECHNICAL SPECIFICATIONS IN RELATION TO WHICH CONFORMITY IS DECLARED:	EN 1494:2000+A1 2008	The standard specifies technical safety requirements and measures for mobile or movable jacks	
7.	ADDITIONAL INFORMATION. THE TECHNICAL DOCUMENTATION FOR THE MACHINERY IS AVAILABLE FROM:	Name: Address: Country:	N/A	
SIGNED FOR AND ON BEHALF OF: PLACE OF ISSUE: DATE OF ISSUE: NAME: FUNCTION: SIGNATURE:		YELLOW AND BLACK TOOLS LTD. ROMSEY, UK. 12/08/2022 JAMES BINGHAM OPERATIONS DIRECTOR		

EU IMPORTER:
TRADE HOUSE FORSAGE INSTRUMENT POL SP.Z.O.O.
UL GRODECKA 1A
15-561 BIALYSTOK
POLAND

EAC

Scan QR Code!

DOWNLOAD YOUR INSTRUCTION MANUAL

AE	BG	DE	ES	FR

HU	PL	RU	TR